OVENS

HLB 840 WH E00

OVEN HLB 840 WH E00	
COLOR	CODE
S/STEEL	41560071
EAN CODE	
8421152148501	

FEATURES

- Hydroclean function
- Multifunction oven (turbo)
- Fingerprint proof Stainless steel
- 9 cooking functions
- Mechanical preheating
- Capacity gross/net: 71/70 litres
- Touch control programmer start stop
- Stainless steel fix knobs with white cover
- 2-glazed door
- Full glass inner door
- Chromed supports with 1 telescopic guide
- Drop down grill
- Cooling fan
- Children safety block option
- Deep tray and reinforced cooking grid
- A+ energy class
- Voltage: 220/240V; Frequency: 50/60Hz
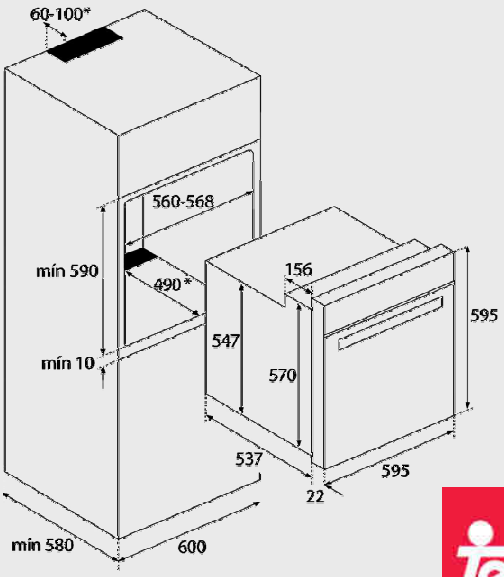
Dimensions mm: 595x 595 x 559